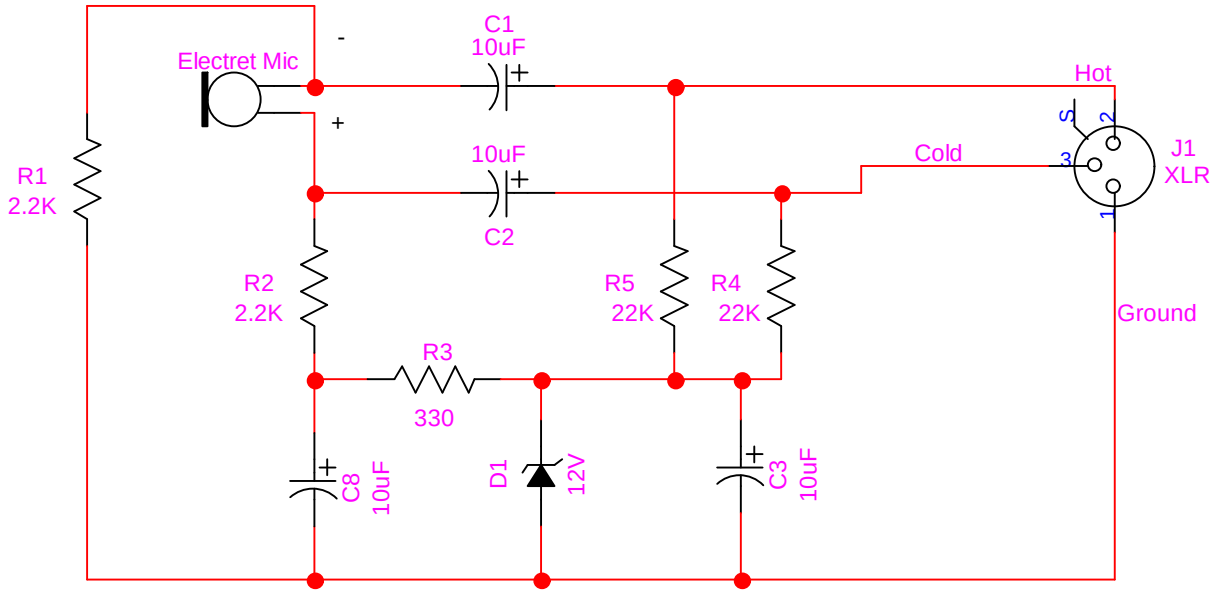
Electret Mic
C1
10uF
10uF
C2
R1
2.2K
R2
2.2K
R3
330
R5
22K
R4
22K
C8
10uF
D1
12V
C3
10uF
Hot
Cold
Ground
J1
XLR

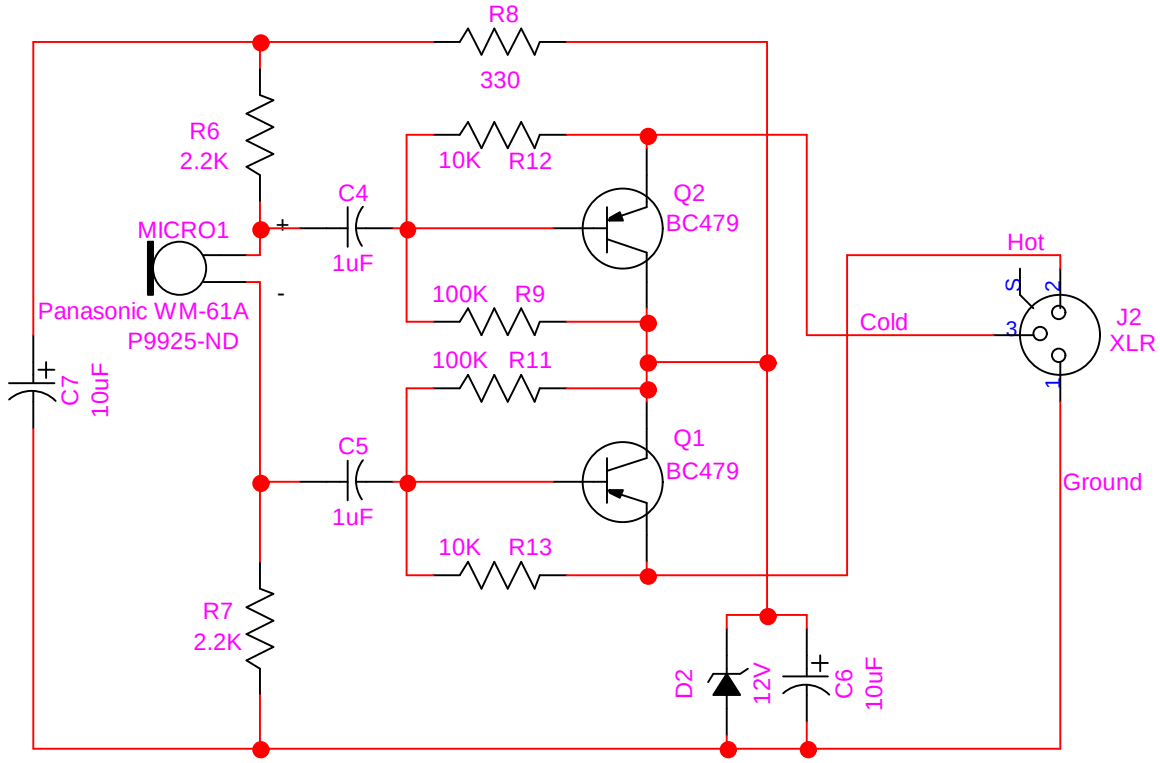
R8
330
R6
2.2K
10K R12
C4
1uF
Q2
BC479
MICRO1
Panasonic WM-61A
P9925-ND
100K R9
100K R11
C7
10uF
C5
1uF
Q1
BC479
10K R13
R7
2.2K
D2
12V
C6
10uF
Hot
Cold
Ground
J2
XLR